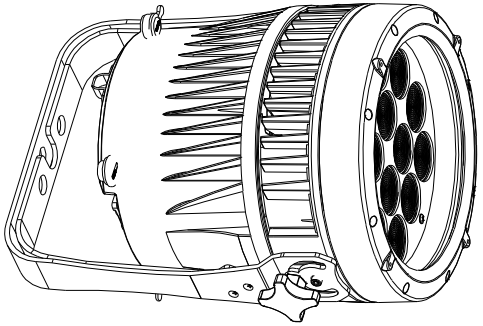

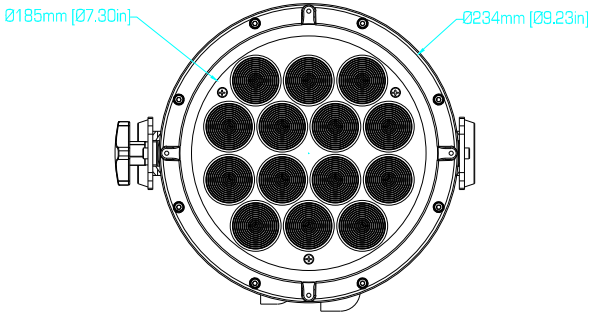

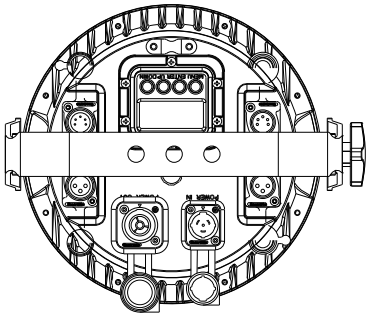

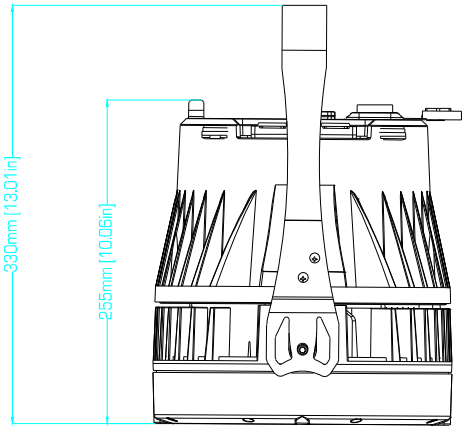

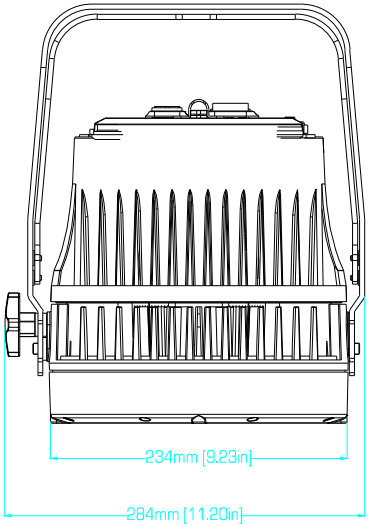

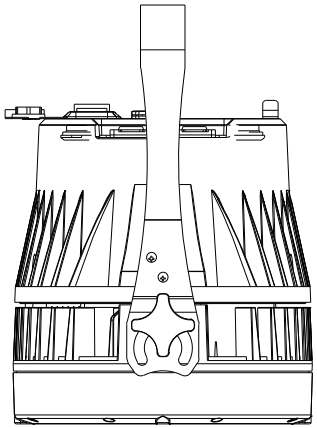

Chauvet Professional	Rev. 2.0
COLORado 2 Quad Zoom	