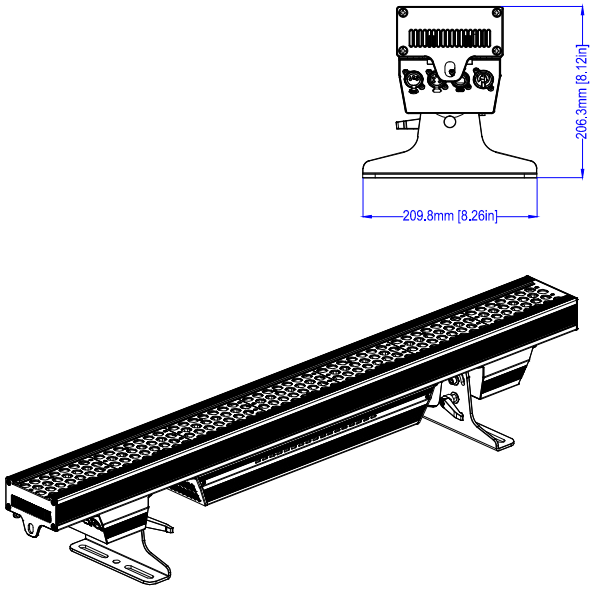

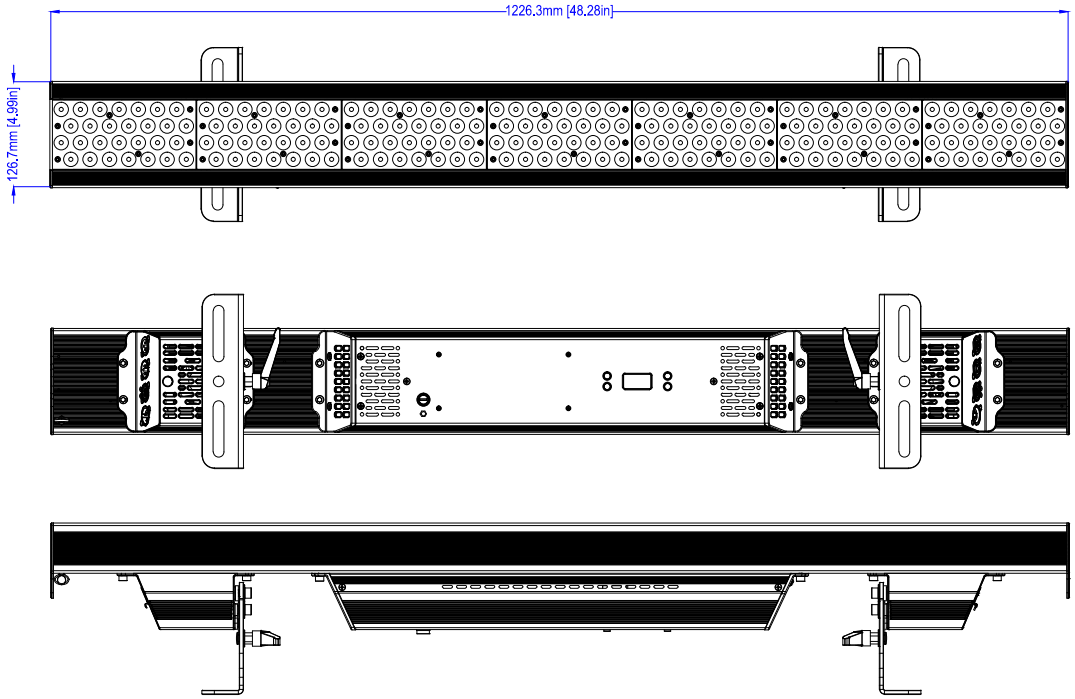

Chauvet Professional	v1.0
Ovation B-1965FC	