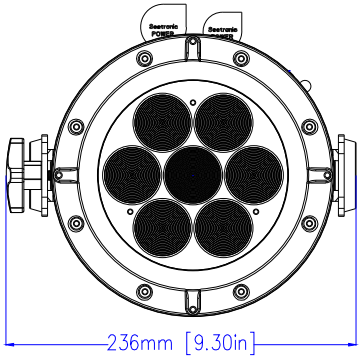

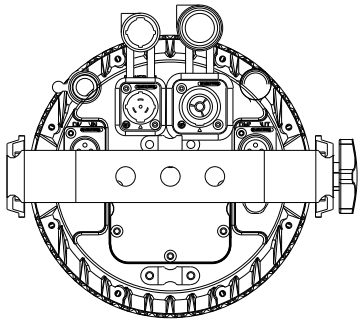

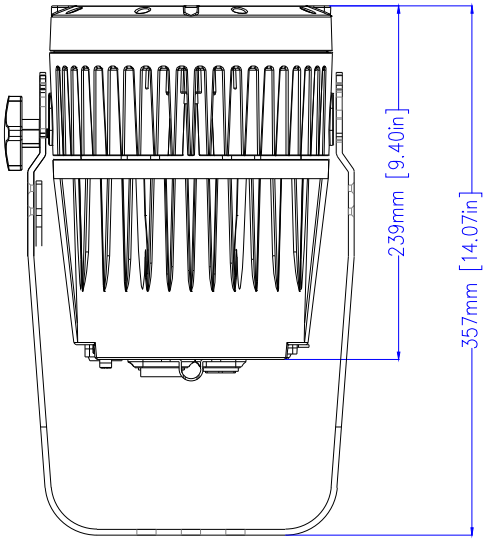

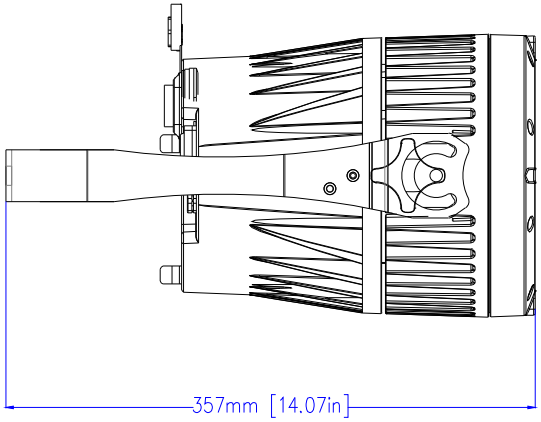

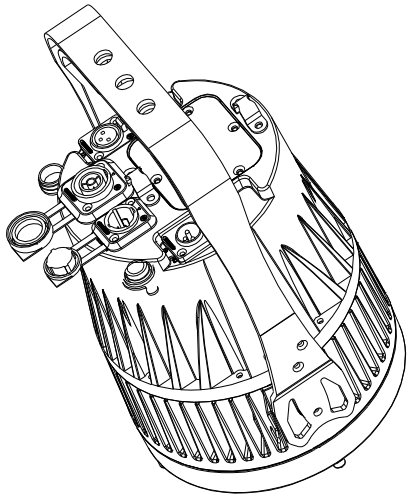

Chauvet Professional	Rev. 3
COLORado 1 Quad Zoom /Quad Zoom VW	