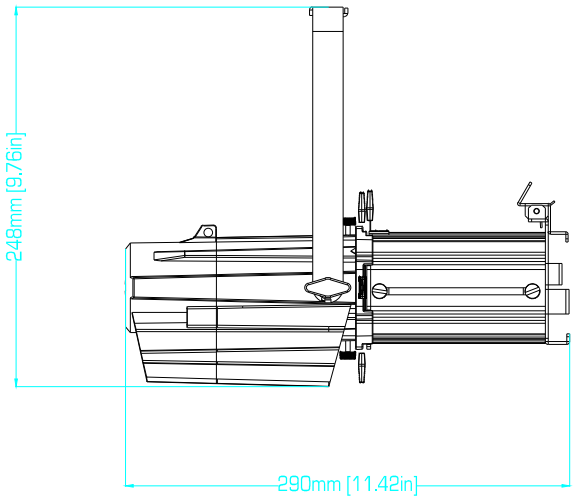

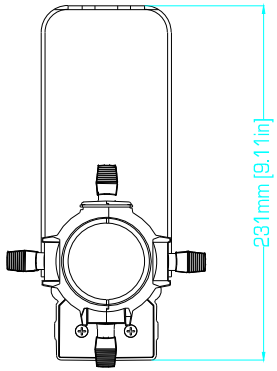

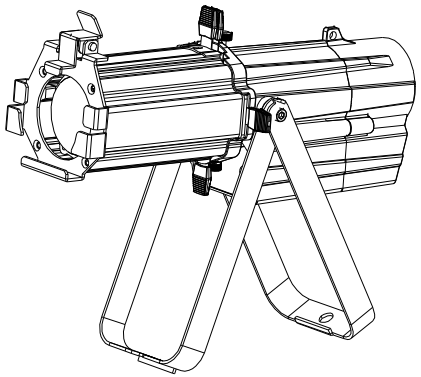

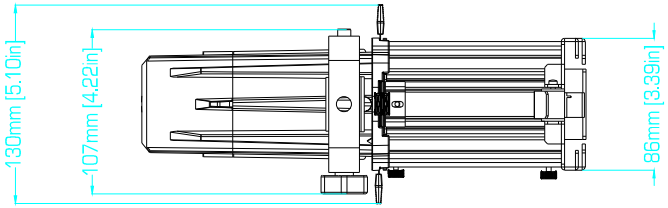

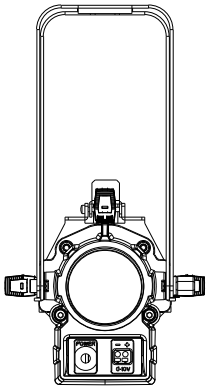

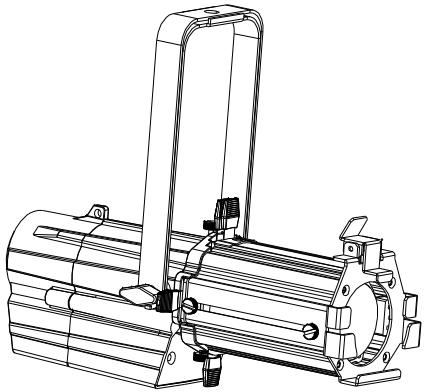

Chauvet Professional	Rev. 2.0
Ovation Min-E-10CW	