Vesuvio II

User Manual

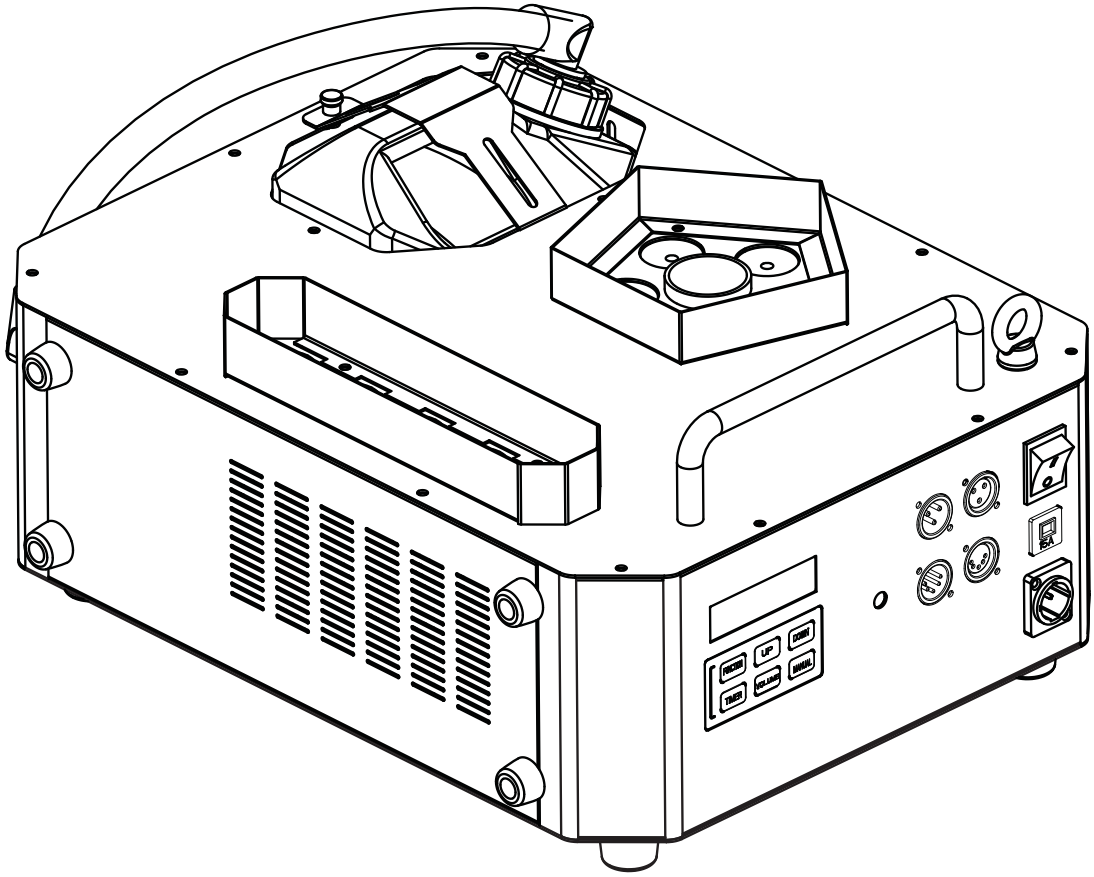

CHAUVET PROFESSIONAL

TABLE OF CONTENTS

1. Edition Notes 1
- Trademarks 1
- Copyright Notice 1
  - Manual Use 1
- Document Printing 1
- Intended Audience 1
- Disclaimer 1
- Document Revision 1

2. Before You Begin 2
- What Is Included 2
- Claims 2
- Manual Conventions 2
- Symbols 2
- Safety Notes 3
  - Personal Safety 3
  - Mounting and Rigging 3
  - Power and Wiring 3
- Operation 4

3. Introduction 5
- Description 5
  - Features 5
- Product Overview 5
- Product Dimensions 6

4. Setup 7
- AC Power 7
  - AC Plug 7
- Resetting the Breaker 7
- DMX Linking 7
  - DMX Personalities 7
- Mounting 8
  - Orientation 8
  - Rigging 8
  - Procedure 8
- Preparing for Operation 9

5. Operation 10
- Control Panel Operation 10
- Control Options 10
- Programming 10
- Menu Map 10
- Configuration (DMX) 11
  - DMX Control 11
- DMX Values 11
- Configuration (Standalone) 11
  - Interval 11
  - Duration 11

6. Technical Information 12
- Product Maintenance 12
- Storage 12

7. Technical Specifications 13

8. Returns 14
9. Contact Us 15

1. EDITION NOTES

The Vesuvio II User Manual includes a description, safety precautions, installation, programming, operation and maintenance instructions for the Vesuvio II as of the release of this edition.

Trademarks

CHAUVET, the Chauvet logo and Vesuvio II are registered trademarks or trademarks of Chauvet & Sons, LLC (d/b/a Chauvet and Chauvet Lighting) in the United States and other countries. Other company and product names and logos referred to herein may be trademarks of their respective companies.

Copyright Notice

The works of authorship contained in this manual, including, but not limited to, all design, text and images are owned by Chauvet.

© Copyright 2017 Chauvet & Sons, LLC. All rights reserved.

Electronically published by Chauvet in the United States of America.

Manual Use

Chauvet authorizes its customers to download and print this manual for professional information purposes only. Chauvet expressly prohibits the usage, copy, storage, distribution, modification, or printing of this manual or its content for any other purpose without written consent from Chauvet.

Document Printing

For best results, print this document in color, on letter size paper (8.5 x 11 in), double-sided. If using A4 paper (210 x 297 mm), configure the printer to scale the content accordingly.

Intended Audience

Any person installing, operating, and/or maintaining this product should completely read through the guide that shipped with the product, as well as this manual, before installing, operating, or maintaining this product.

Disclaimer

Chauvet believes that the information contained in this manual is accurate in all respects. However, Chauvet assumes no responsibility and specifically disclaims any and all liability to any party for any loss, damage or disruption caused by any errors or omissions in this document, whether such errors or omissions result from negligence, accident or any other cause. Chauvet reserves the right to revise the content of this document without any obligation to notify any person or company of such revision, however, Chauvet has no obligation to make, and does not commit to make, any such revisions. Download the latest version from www.chauvetprofessional.com.

Document Revision

This Vesuvio II User Manual is the 1st edition of this document. Go to www.chauvetprofessional.com for the latest version.

2. BEFORE YOU BEGIN

What Is Included

- Vesuvio II
- Seetronic Powerkon IP65 power cord
- Omega Brackets **(x2)**
- Warranty Card
- Quick Reference Guide

Claims

Carefully unpack the product immediately and check the container to make sure all the parts are in the package and are in good condition.

If the box or the contents (the product and included accessories) appear damaged from shipping, or show signs of mishandling, notify the carrier immediately, not Chauvet. Failure to report damage to the carrier immediately may invalidate your claim. In addition, keep the box and contents for inspection.

For other issues, such as missing components or parts, damage not related to shipping, or concealed damage, file a claim with Chauvet within 7 days of delivery.

Manual Conventions

Convention	Meaning
1–512	A range of values
50/60	A set of values of which only one can be chosen
<SET>	A button on the product's control panel
Settings	A product function or a menu option

Symbols

Symbol	Meaning
	Electrical warning. Not following these instructions may cause electrical damage to the product, accessories, or the user.
	Critical installation, configuration, or operation information. Not following these instructions may make the product not work, cause damage to the product, or cause harm to the operator.
	Important installation or configuration information. The product may not function correctly if this information is not used.
	Useful information.

Any reference to power connections in this manual assumes the use of Seetronic IP rated cables.

The term "DMX" used throughout this manual refers to the USITT DMX512-A digital data transmission protocol.

Safety Notes

Read all the following safety notes before working with this product. These notes contain important information about the installation, usage, and maintenance of this product.

This product contains no user-serviceable parts. Any reference to servicing in this User Manual will only apply to properly trained, certified technicians. Do not open the housing or attempt any repairs.

All applicable local codes and regulations apply to proper installation of this product.

Personal Safety

- Depending on the amount of fog generated, all fog machines may set off smoke detectors.
- Drain the tank before transporting the product.
- Always disconnect this product from its power source before servicing.
- The product's nozzle is very hot during operation and it remains hot for a long time after operation has stopped.
- Always connect this product to a grounded circuit to avoid the risk of electrocution.
- Do not drink or become in contact with the fog fluid. If you do, call your local emergency service (911 in the US) for help.
- Do not use for space heating purposes.
- Do not touch this product's housing during operation because it may be very hot.

Mounting and Rigging

- This product is for indoor use only! To prevent risk of fire or shock, do not expose this product to rain or moisture. (IP20)
- CAUTION: When transferring product from extreme temperature environments, (e.g. cold truck to warm humid ballroom) condensation may form on the internal electronics of the product. To avoid causing a failure, allow product to fully acclimate to the surrounding environment before connecting it to power.
- Mount this product in a location with adequate ventilation, at least 20 in (50 cm) from adjacent surfaces.
- Make sure there are no flammable materials close to this product while it is operating.
- When hanging this product, always secure to a fastening device using a safety cable.

Power and Wiring

- Always make sure you are connecting this product to the proper voltage in accordance with the specifications in this manual or on the product's specification label.
- To eliminate unnecessary wear and improve its lifespan, during periods of non-use completely disconnect the product from power via breaker or by unplugging it.
- Never connect this product to a dimmer pack or rheostat.
- Never disconnect this product by pulling or tugging on the power cable.

Operation

- Do not operate this product if you see damage to the housing, fluid tank, or cables. Have the damaged parts replaced by an authorized technician at once.
- Be sure that no ventilation slots on the product's housing are blocked.
- Never carry the product from the power cord or any moving part. Always use the handles.
- The fog exits the nozzle at a very high temperature and it remains hot for a long time after operation has stopped. Keep a minimum distance of 6.5 ft (2 m) from the nozzle to the nearest object.
- The maximum ambient temperature is 113 °F (45 °C). Do not operate this product at a higher temperature.
- In the event of a serious operating problem, stop using this product immediately!
- Do not add perfume, alcohol, gasoline, or any other flammables to the fog fluid.
- Use only CHAUVET water-based Fog Fluid (QDF)!

If your Chauvet product requires service, contact Chauvet Technical Support.

3. INTRODUCTION

Description

The Vesuvio II atmospheric effect generator allows you to add red, green, blue, amber, and UV LED color mixing to fog output for a multicolor atmospheric column. Vesuvio II also features a 40,000 cubic feet per minute (cfm) output.

Features

- Advanced red, green, blue, amber, and UV (RGBA/UV) LED color mixing
- 40 second continuous bursts of fog, for intense effects and performance
- 40,000 CFM fog output for intense, large effects
- 2.5 l fluid tank for reliability in production
- Strong, sturdy construction for numerous production types
- DMX control for ease of use in production situations
- 3- and 5-pin DMX input/output connections

Product Overview

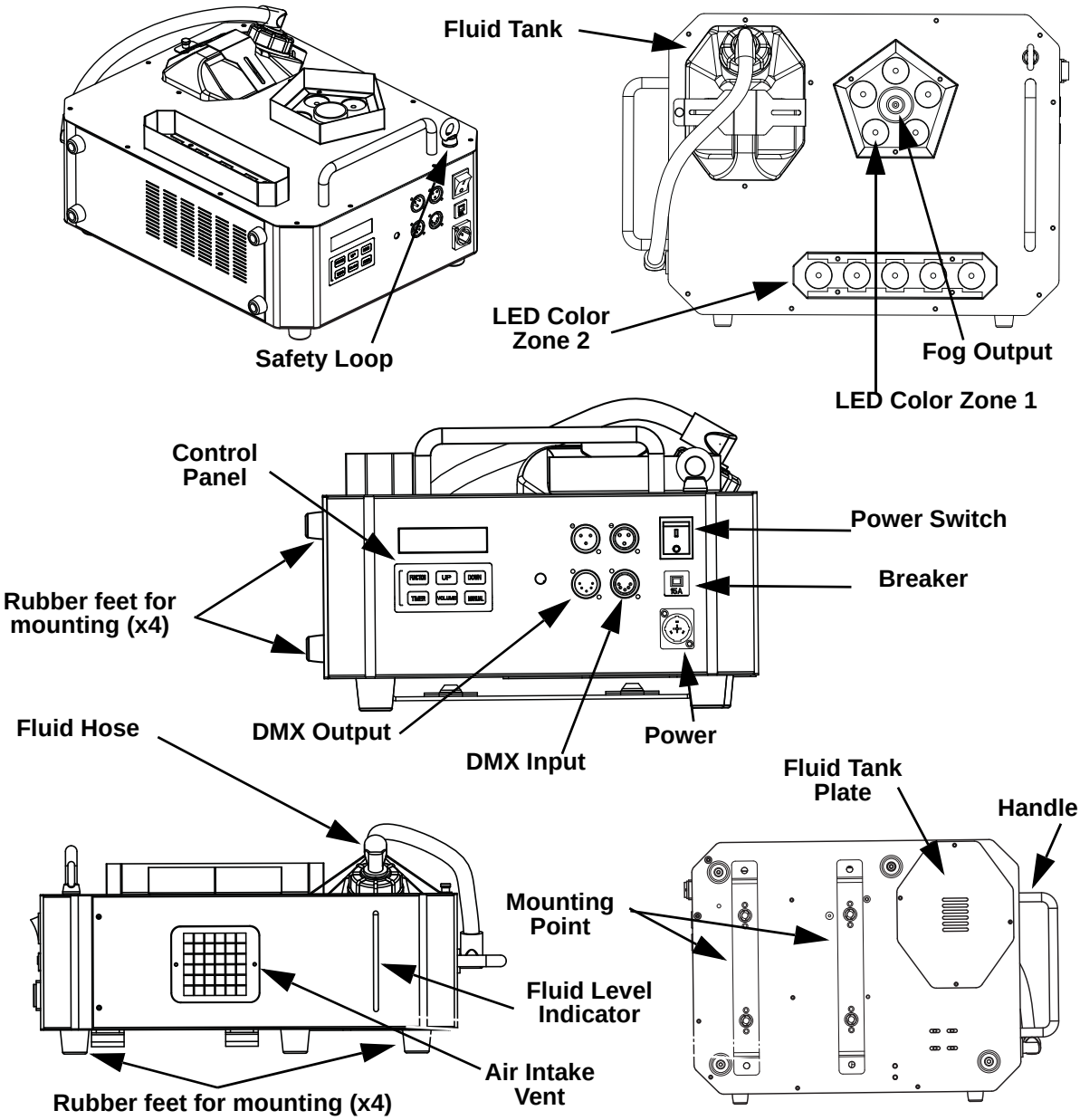

Product Dimensions

9.41in
239mm

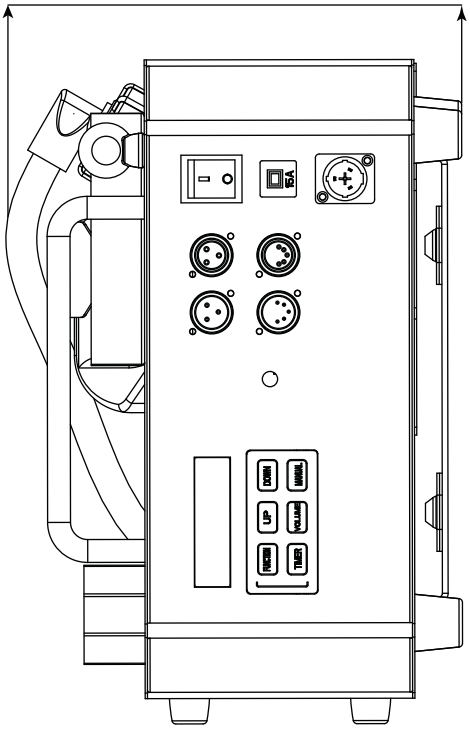

19.49 in
495 mm

13.70 in
348 mm

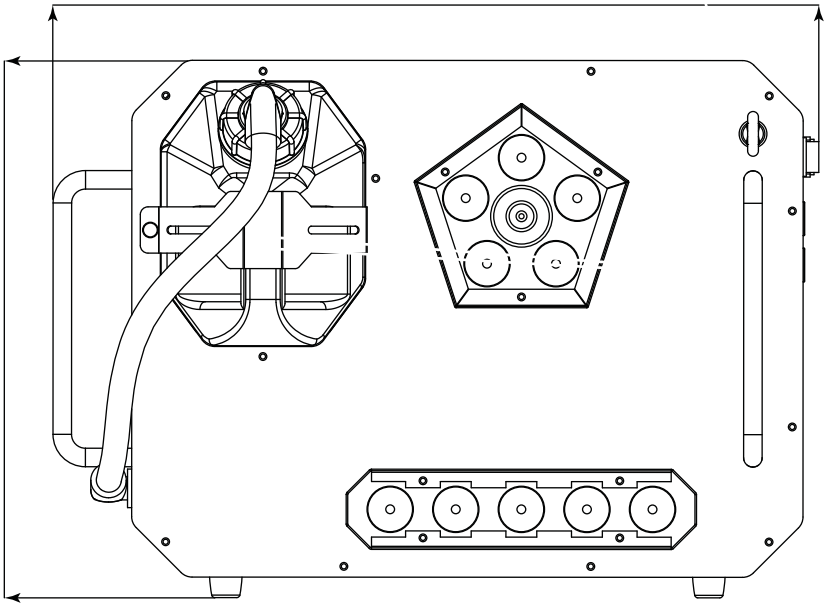

4. SETUP

AC Power

Each Vesuvio II has a fixed power supply that works with an input voltage of either 120 VAC, 60 Hz or 230 VAC, 50 Hz, depending on the specific model. To determine the power requirements for each Vesuvio II, refer to the label affixed to the product. You can also refer to the Technical Specifications chart in this manual.

The listed current rating indicates the maximum current draw during normal operation. For more information, download Sizing Circuit Breakers from the Chauvet website: www.chauvetprofessional.com.

.

- **Always connect the product to a protected circuit (circuit breaker or fuse). Make sure the product has an appropriate electrical ground to avoid the risk of electrocution or fire.**
- **To eliminate unnecessary wear and improve its lifespan, during periods of non-use completely disconnect the product from power via breaker or by unplugging it.**

Never connect the product to a rheostat (variable resistor) or dimmer circuit, even if the rheostat or dimmer channel serves only as a 0 to 100% switch.

AC Plug

The Vesuvio II comes with a power input cord terminated with a Seetronic Powerkon IP65 connector on one end and an Edison plug on the other end (U.S. market). If the power input cord that came with your product has no plug, or if you need the change the plug, use the table below to wire the new plug.

Connection	Wire (U.S.)	Wire (Europe)	Screw Color
AC Live	Black	Brown	Yellow or Brass
AC Neutral	White	Blue	Silver
AC Ground	Green/Yellow	Green/Yellow	Green

Resetting the Breaker

This product is equipped with a resettable circuit breaker. If the breaker trips, all sections of this product will lose power.

1. Remove the power cord from mains power.
2. Allow unit to cool for 15 minutes.
3. After 15 minutes, you may attempt to reset the breaker by pressing the button with your finger.
4. Plug the product's power cord into the power outlet and continue using as recommended.

DMX Linking

You can link the Vesuvio II to a DMX controller using a 3- or 5-pin DMX connection. If using other DMX-compatible products with this product, you can control each individually with a single DMX controller.

DMX Personalities

The Vesuvio II uses a 3- or 5-pin DMX data connection for the 15-channel DMX personality.

- Refer to the Introduction for a brief description of each DMX personality.
- Refer to the Operation chapter to learn how to configure the Vesuvio II to work in these personalities.
- The DMX Values section provides detailed information regarding the DMX personalities.

If you are not familiar with or need more information about DMX standards, Master/Slave connectivity, or the DMX cables needed to link this product to a DMX controller, download the DMX Primer from the Chauvet website: www.chauvetprofessional.com.

Mounting

Before mounting the product, read and follow the safety recommendations indicated in the Safety Notes. For our CHAUVET Professional line of mounting clamps, go to http://trusst.com/products/.

Orientation

Always mount this product in a safe position, making sure there is adequate room for ventilation, configuration, and maintenance. Always mount this product in a safe position and make sure there is adequate room for ventilation, configuration, and maintenance. The Vesuvio II should be suspended upright or upside down using the 2 Omega brackets included, or it can be placed on its rubber feet on a flat level surface.

Chauvet recommends using the following general guidelines when mounting this product:

- When selecting an installation location, consider easy access to this product for operation, programming adjustments, and routine maintenance.
- Make sure to mount this product away from any flammable material as indicated in the Safety Notes.
- Never mount in places where rain, high humidity, extreme temperature changes, or restricted ventilation may affect the product.
- If hanging this product, make sure that the mounting location can support the product's weight. See the Technical Specifications for the weight-bearing requirements of this product.
- When hanging this product, always secure to a fastening device using a safety cable. For our CHAUVET Professional line of safety cables, go to http://trusst.com/products/.
- When mounting the product on the floor, make sure that the product and cables are away from people and vehicles.
- When mounting the product overhead, always use a safety cable. Mount the product securely to a rigging point, whether an elevated platform or a truss.
- When rigging the product onto a truss, use a mounting clamp of appropriate weight capacity.

Procedure

The Vesuvio II includes 8 rubber feet for floor or horizontal mounting. You must supply the mounting clamps. Make sure the clamps are capable of supporting the weight of this product. Use at least one mounting point per product. For the CHAUVET Professional line of mounting clamps, go to http://www.trusst.com/products.

Mounting Diagram

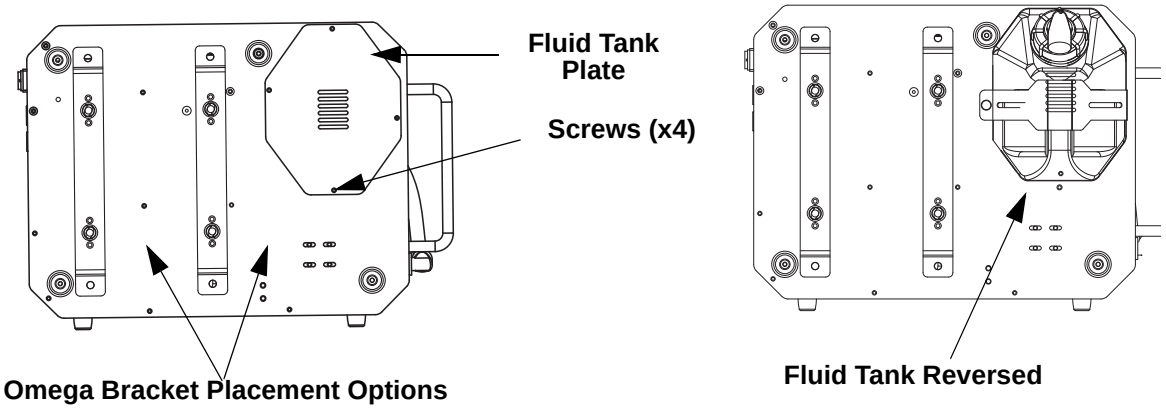

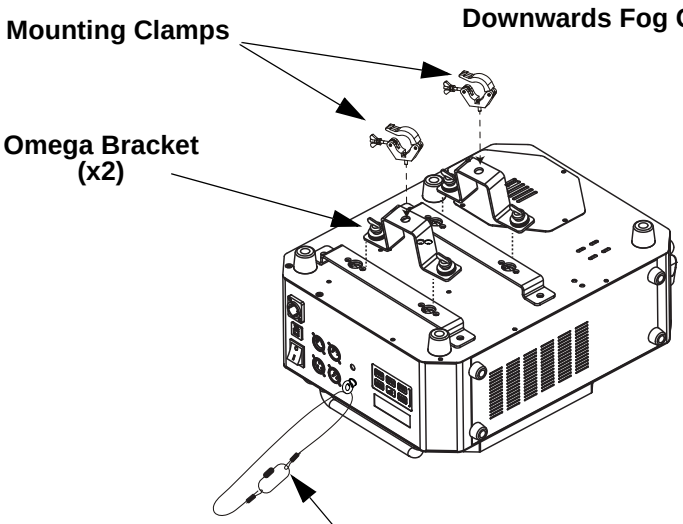

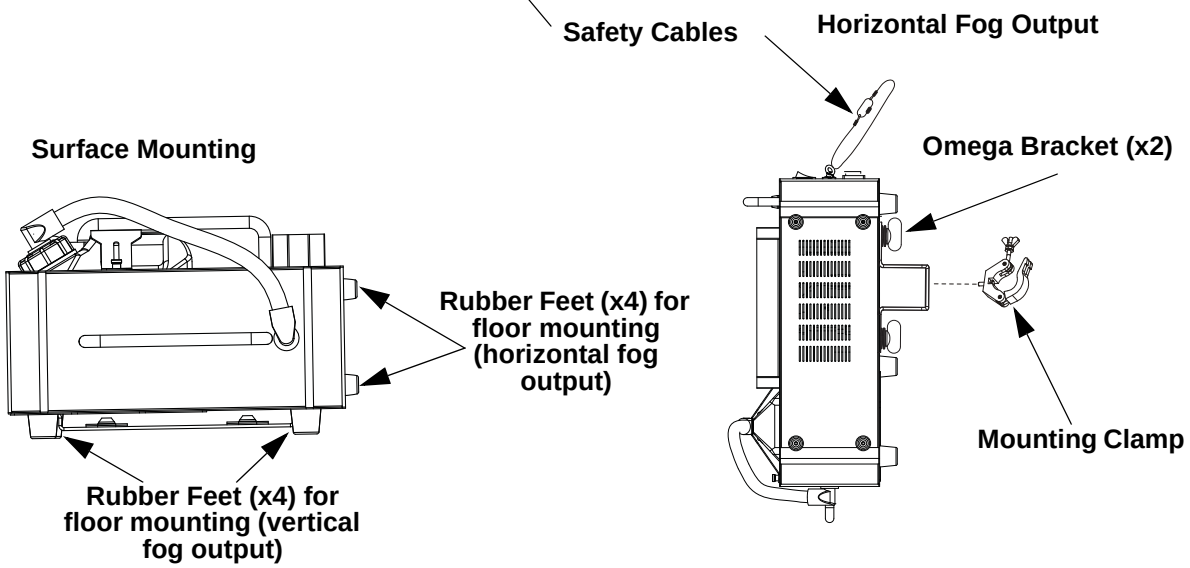

Tank Inversion

To avoid leaking, invert the fluid tank when mounting this product in an inverted position.

1. Remove the screws and bottle lock to take out the tank.

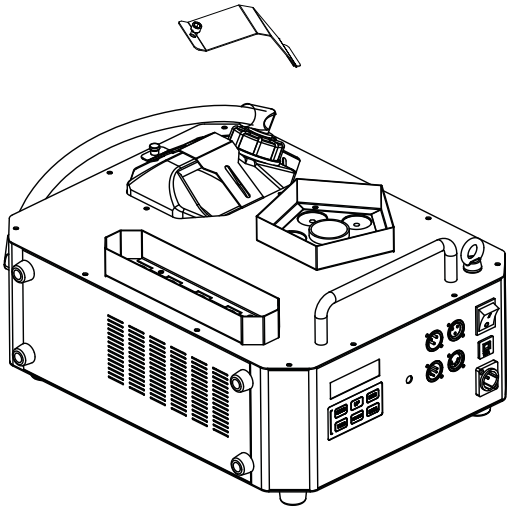

2. Turn the fog machine upside down and remove the screws to take off the removable plate.

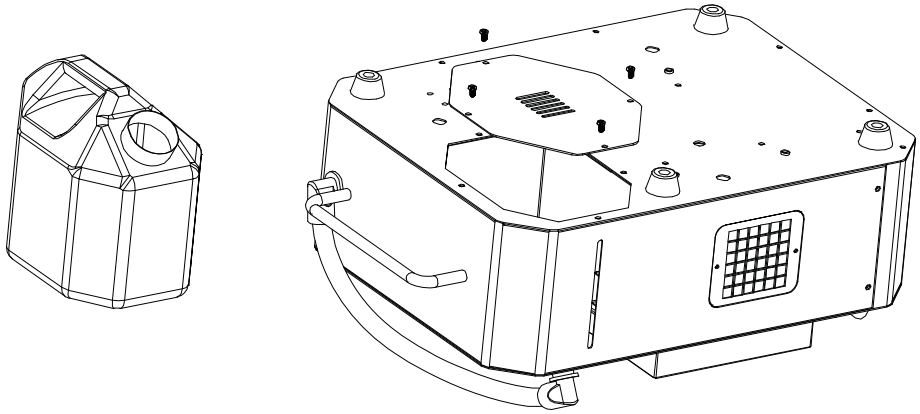

3. Attach the removable plate to the opposite side and secure the tank with the bottle lock.

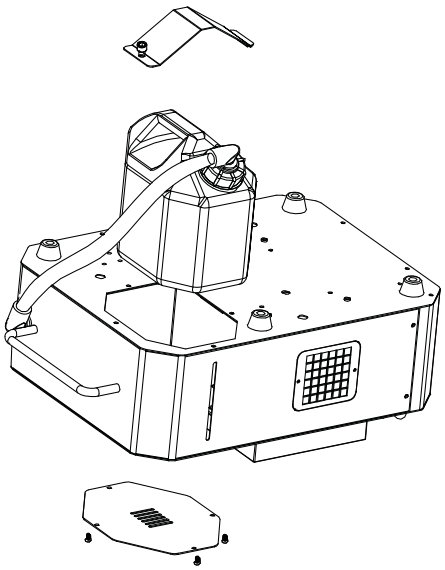

Preparing for Operation

To prepare the Vesuvio II for operation:

1. Open the flight case.
2. Pull out the fluid tank and remove the cap.
3. Verify that the two plastic hoses attached to the inside of the cap are in place and in good condition.
4. Pour Chauvet (QDF) fog fluid inside the tank, and re-cap.
5. Reinsert the tank.
6. Make sure that the plastic hose that goes from the cap to the foggerfogr is not bent.
7. Plug in power and wait approximately 30 seconds for warm-up to complete.

Only use Chauvet approved (QDF) fog fluid. Otherwise, you might not have satisfactory results. In addition, unapproved fluid can damage the Vesuvio II by causing the heater element to become clogged, and may also cause harm to humans or animals. This may void your warranty.

5. OPERATION

Control Panel Operation

BUTTON/ KNOB	FUNCTION
<FUNCTION>	Enters the programming mode
<UP>	Navigates upwards through the menu list and increases the numeric value when in a function
<DOWN>	Navigates downwards through the menu list and decreases the numeric value when in a function
<TIMER>	Starts the timer controlled operation
<VOLUME>	Controls the fog volume,1-100%
<MANUAL>	Manual fog output

Control Options

Set the Vesuvio II starting address in the 001-512 DMX range. This enables control of up to 256 products in the 15-channel personality.

Programming

Refer to the Menu Map to understand the menu options. The menu map shows the main level and a variable number of programming levels for each option.

- To go to the desired main level, press **<FUNCTION>** repeatedly until the option shows on the display. This will take you to the first programming level for that option.
- To select an option or value within the current programming level, press **<UP>** or **<DOWN>** until the option shows on the display. If there is another programming level, you will see that first option, or you will see the selected value.
- Press **<FUNCTION>** repeatedly to exit to the previous main level.

Menu Map

Main Level	Programming Levels	Description
Interval Set	**10-200 Seconds**	Sets the interval between fog output
Duration Set	**1-10 Seconds**	Sets the duration of the fog output
Color	**OFF**	No color output
	1	Red
	2	Green
	3	Blue
	4	Amber
	5	Ultraviolet
	6	Hot pink
	7	Magenta
	8	Yellow
	9	Cyan
	10	White
	11	Zone 1 red, zone 2 green
	12	Zone 1 red, zone 2 blue
	13	Zone 1 green, zone 2 red
	14	Zone 1 green, zone 2 blue
	15	Zone 1 blue, zone 2 red
	16	Zone 1 blue, zone 2 green
	17	Zone 1 magenta, zone 2 amber
	18	Zone 1 magenta, zone 2 blue
	19	Zone 1 amber, zone 2 magenta
	20	Zone 1 blue, zone 2 hot pink
	21	Random color output
DMX	**001-512**	Selects the DMX starting address

Color Zones

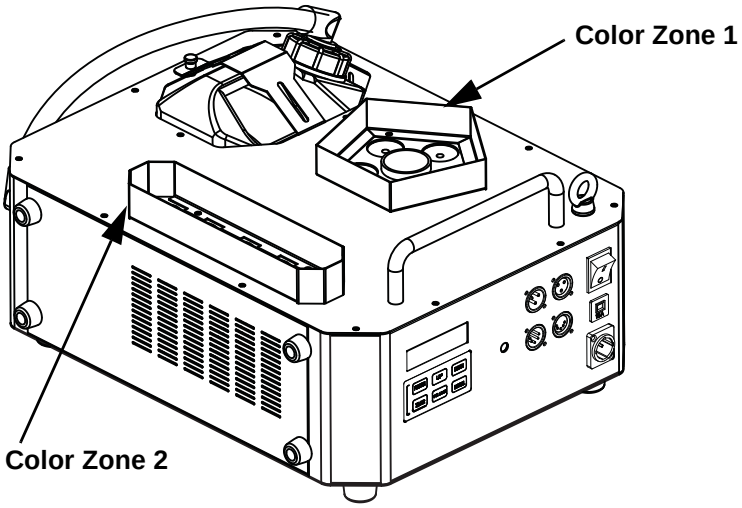

Configuration (DMX)

Use DMX configurations to operate the product with a DMX controller.

DMX Control

In this mode, each product will respond to a unique starting address from the DMX controller. All products with the same starting address will respond in unison.

1. Go to **DMX Add.** main level.
2. Select the starting address (**001**–**512**).

Setting the LED Color

To adjust the color of the LEDs, do the following:

1. Press **<FUNCTION>** repeatedly until Color shows on the display.
2. Use **<UP>** or **<DOWN>** to select the desired color (**1–21**).

Configuration (Standalone)

Use standalone configuration to operate the product without a DMX controller.

Interval

1. Go to **Interval Set** main level
2. Select the desired speed (**10-200**)

Duration

1. Go to the **Duration Set** main level
2. Select how long the fog flow will last (**1-10**)

Timer Mode

When in Timer mode, the Vesuvio II will produce fog and light in pre-configured time intervals defined by the Interval Set and Duration Set menu options. See the Timer Mode Parameters section for details about how to configure these parameters. To operate in Timer mode, do the following:

1. Press **<TIMER>** and the display will show a countdown of the interval timer.
2. When the counter reaches zero (**0**), the Vesuvio II will start producing haze and light.
3. The haze and light output duration during Timer mode is set by the Duration Set menu option.
4. The color of the LEDs is set using the Color menu option.
5. This cycle will repeat itself until you press **<TIMER>** again or until the Vesuvio II runs out of fluid.

Manual Mode

In the Manual mode, the Vesuvio II will output fog and light for as long as **<MANUAL>** remains pressed. The output volume will be at 100% full fog and light output.

- Press **<MANUAL>**.

This mode will continue until you release **<MANUAL>** or until the Vesuvio II runs out of fluid.

Timer Mode Parameters

These parameters determine the intervals for the Vesuvio II while in Timer mode. To configure these parameters do the following:

1. Press **<FUNCTION>** repeatedly until **Interval Set** shows on the display.
2. Use **<UP>** or **<DOWN>** to select the time in seconds (**10–200s**) between fog and light output.
3. Press **<FUNCTION>** repeatedly until **Duration Set** shows on the display.
4. Use **<UP>** or **<DOWN>** to select the time in seconds (**1–10s**) for the duration of the fog and light output.

DMX Values

15CH

Channel	Function	Value	Percent/Setting
1	**Fog**	000 ⇔ 009	No function
		010 ⇔ 255	Fog on
2	**Red zone 1**	000 ⇔ 014	No function
		015 ⇔ 255	0-100%
3	**Green zone 1**	000 ⇔ 014	No function
		015 ⇔ 255	0-100%
4	**Blue zone 1**	000 ⇔ 014	No function
		015 ⇔ 255	0-100%
5	**Amber zone 1**	000 ⇔ 014	No function
		015 ⇔ 255	0-100%
6	**UV zone 1**	000 ⇔ 014	No function
		015 ⇔ 255	0-100%
7	**Red zone 2**	000 ⇔ 014	No function
		015 ⇔ 255	0-100%
8	**Green zone 2**	000 ⇔ 014	No function
		015 ⇔ 255	0-100%
9	**Blue zone 2**	000 ⇔ 014	No function
		015 ⇔ 255	0-100%
10	**Amber zone 2**	000 ⇔ 014	No function
		015 ⇔ 255	0-100%
11	**UV zone 2**	000 ⇔ 014	No function
		015 ⇔ 255	0-100%
12	**Color Mixing**	000 ⇔ 009	No function
		010 ⇔ 255	Color Mixing
13	**Auto Speed**	000 ⇔ 009	No function
		010 ⇔ 255	Speed, slow to fast
14	**Strobe**	000 ⇔ 009	No function
		010 ⇔ 255	Speed, slow to fast
15	**Dimmer**	000 ⇔ 014	No function
		015 ⇔ 255	0-100%

6. TECHNICAL INFORMATION

Product Maintenance

Do not allow the fog machine to become clogged. After every 40 hours of continuous operation, use CHAUVET Fog Cleaner Quart (FCQ) through the system to prevent the accumulation of particulate matter in the heating element.

The recommended cleaning procedure is as follows.

1. Unplug the product from power.
2. Empty all fog fluid from the machine.
3. Add cleaning solution to the tank.
4. Connect the product to power and allow it to warm up.
5. Run the unit in a well-ventilated area until the tank is empty.
6. Refill with fog fluid to continue using the fogger. Run the machine briefly to clear any cleaning solution from the pump and heater.

- **FCQ (Fog Cleaner Quart) was specifically developed by CHAUVET to clean your Vesuvio II. Make sure you use FCQ after every 40 hours of use to increase the life of your fogger.**
- **Do not spin the fans using compressed air because you could damage the fogger.**
- **Test-run your Vesuvio II on a monthly basis to achieve the best performance.**

Storage

Before storing the fogger, run FCQ through the system as described in the cleaning procedure above; however, only follow steps 1 through 5. Do not refill the tank with fogger fluid if storing the fogger. Cleaning the system prior to storage will help prevent any particles from condensing inside the pump or heater while not in use.

7. TECHNICAL SPECIFICATIONS

Dimensions and Weight

Length	Width	Height	Weight
19.49in (495 mm)	9.41 in (239 mm)	13.2 in (335 mm)	28.4 lb (12.9 kg)

Note: Dimensions in inches rounded to the nearest decimal digit.

Power

Power Supply Type	Range	Voltage Selection
Model-specific	120 VAC, 60 Hz	Fixed

Parameter	120 V, 60 Hz	230V, 50 Hz
Consumption	1,480 W	2,880 W
Operating Current	12.55 A	12.55 A
Breaker	F 15 A, 250V	F 15 A, 250V

Power I/O	U.S./Worldwide	UK/Europe
Power input connector	Seetronic Powerkon IP65	Seetronic Powerkon IP65
Power Cord plug	Edison (U.S.)	Local Plug

Operation/Capacity/Consumption

Heat-up Time	Tank Capacity	Fluid Consumption
10 min	0.7 gal (2.5 l)	90 ml/min

Output
40,000 CFM

Light Source

Type	Color	Quantity	Power	Current	Lifespan
LED	RGBA+UV	10	8.5 W	3 A	50,000

Photometrics

Illuminance @ 5 m (Zone 1)	Illuminance @ 5 m (Zone 2)	Strobe Rate
199.5 lux	154 lux	0 to 20 Hz

Thermal

Maximum External Temperature	Cooling System
113 °F (45 °C)	Convection

DMX

I/O Connector	Channel Range
3-or 5-pin XLR	15

Ordering

Product Name	Item Code	UPC Number
Vesuvio II	05341394	781462217426
Vesuvio II 230V	05341395	781462217433

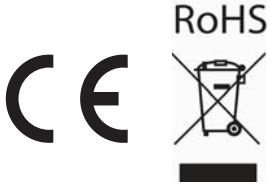

RETURNS

Send the product prepaid, in the original box, and with the original packing and accessories. Chauvet will not issue call tags.

Call Chauvet and request a Return Merchandise Authorization (RMA) number before shipping the product. Be prepared to provide the model number, serial number, and a brief description of the cause(s) for the return.

Clearly label the package with an RMA number. Chauvet will refuse any product returned without an RMA number.

Write the RMA number on a properly affixed label. DO NOT write the RMA number directly on the box.

Once you have the RMA number, provide the following information on a piece of paper and place it inside the box:

- Your name
- Your address
- Your phone number
- RMA number
- A brief description of the problem

Be sure to pack the product properly. Any shipping damage resulting from inadequate packaging will be your responsibility. FedEx packing or double-boxing are recommended.

Chauvet reserves the right to use its own discretion to repair or replace returned product(s).

CONTACT US

World Headquarters	
General Information	**Technical Support**
Address: 5200 NW 108th Ave. Sunrise, FL 33351 Voice: (954) 577-4455 Fax: (954) 929-5560 Toll Free: (800) 762-1084	Voice: (844) 393-7575 Fax: (954) 756-8015 Email: chauvetcs@chauvetlighting.com **Website** www.chauvetlighting.com

EUROPE	
General Information	**Technical Support**
Address: Stokstraat 18 9770 Kruishoutem Belgium Voice: +32 9 388 93 97	Email: eutech@chauvetlighting.eu **Website** www.chauvetlighting.eu
General Information	**Technical Support**
Address: Unit 1C Brookhill Road Industrial Estate Pinxton, Nottingham, UK NG16 6NT Voice: +44 (0) 1773 511115 Fax: +44 (0) 1773 511110	Email: uktech@chauvetlighting.com **Website** www.chauvetlighting.co.uk

MEXICO	
General Information	**Technical Support**
Address: Av. de las Partidas 34 - 3B, Zona Industrial Lerma (Entrance by Calle 2) Lerma, Edo. de México, CP 52000 Voice: +52 (728)-690-2010	Email: servicio@chauvet.com.mx **Website** www.chauvet.com.mx

Visit the applicable website above to verify our contact information and instructions to request support. Outside the U.S., United Kingdom, Ireland, Mexico or Benelux, contact the dealer of record.