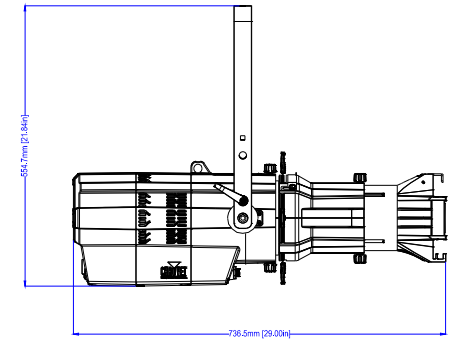

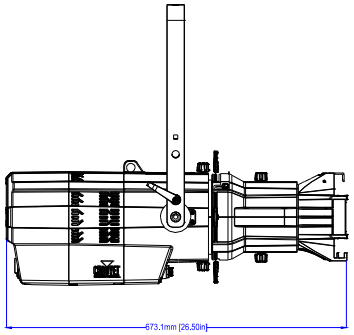

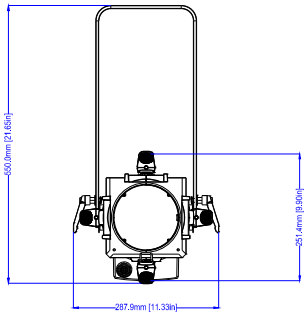

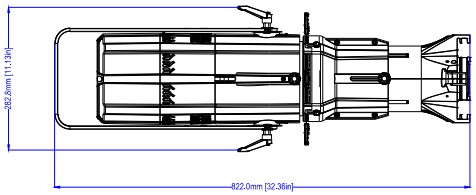

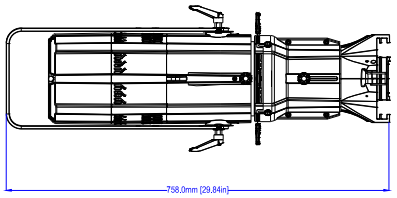

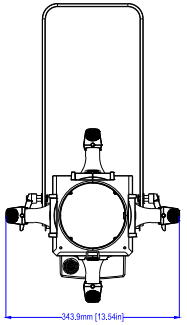

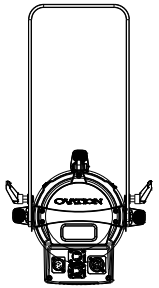

Chauvet Professional	v1.0
Ovation E-910FC IP	